Cambridge International Examinations
Cambridge International General Certificate of Secondary Education

CANDIDATE NAME	

CENTRE NUMBER						CANDIDATE NUMBER					

DESIGN AND TECHNOLOGY **0445/43**

Paper 4 Systems and Control **October/November 2018**

1 hour

Candidates answer on the Question Paper.

No Additional Materials are required.

READ THESE INSTRUCTIONS FIRST

Write your Centre number, candidate number and name on all the work you hand in.
Write in dark blue or black pen.
You may use an HB pencil for any diagrams or graphs.
Do not use staples, paper clips, glue or correction fluid.
DO **NOT** WRITE IN ANY BARCODES.

Section A
Answer **all** questions in this section.

Section B
Answer **one** question in this section.

You may use a calculator.

At the end of the examination, fasten all your work securely together.
The number of marks is given in brackets [ ] at the end of each question or part question.
The total of the marks for this paper is 50.

This document consists of **17** printed pages and **3** blank pages.

DC (LK) 163406
© UCLES 2018

CAMBRIDGE International Examinations

Section A

Answer **all** questions in this section.

1 **(a)** Fig. 1 shows a computer keyboard. The keys marked **X**, **Y** and **Z** act as toggle switches.

Fig. 1

Describe the switching action of all of the other keys on the keyboard.

.....[1]

(b) Give **one** different use of a toggle switch.

.....[1]

2 Capacitors are available in a range of sub-multiple values.
Draw lines on Fig. 2 to connect the names and sub-multiple values.
One has been done for you.

Farad	10^{-6}
Picofarad	10^{-9}
Microfarad	10^{0}
Nanofarad	10^{-12}

[3]

Fig. 2

3 In the space below draw the following electronic symbols:

Conductors crossing Conductors joined Alternating current [3]

4 Pneumatic cylinders can be used to produce motion.

(a) Describe the difference between a single acting cylinder (SAC) and a double acting cylinder (DAC).

.....

.....

.....[2]

(b) State the type of motion produced by a pneumatic cylinder.

.....[1]

5 Electronic and pneumatic systems can be integrated by using reed switch cylinders to determine the position of a pneumatic piston.
Describe how a reed switch cylinder works.

.....

.....

.....[2]

6 Fig. 3 shows three examples of a lever.

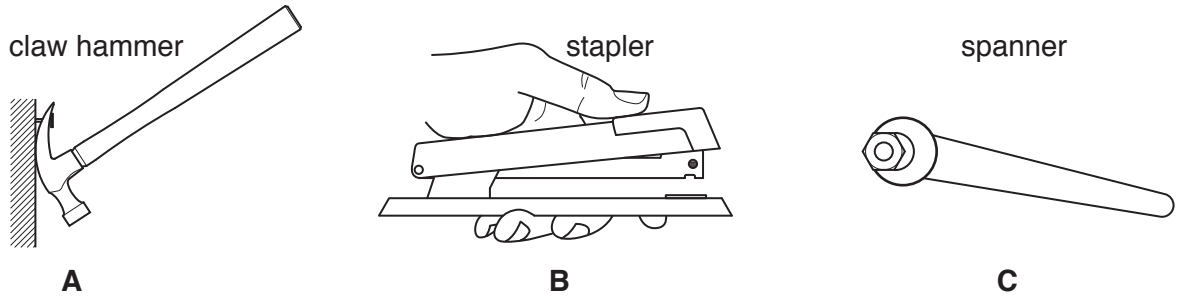

Fig. 3

(a) State the order of lever used in each example.

Lever **A** .....

Lever **B** .....

Lever **C** .....
[3]

(b) State which of the three levers will not provide a mechanical advantage to the user.

.....[1]

7 Fig. 4 shows a commonly used method of reinforcing a joint on a structure made from steel tube.

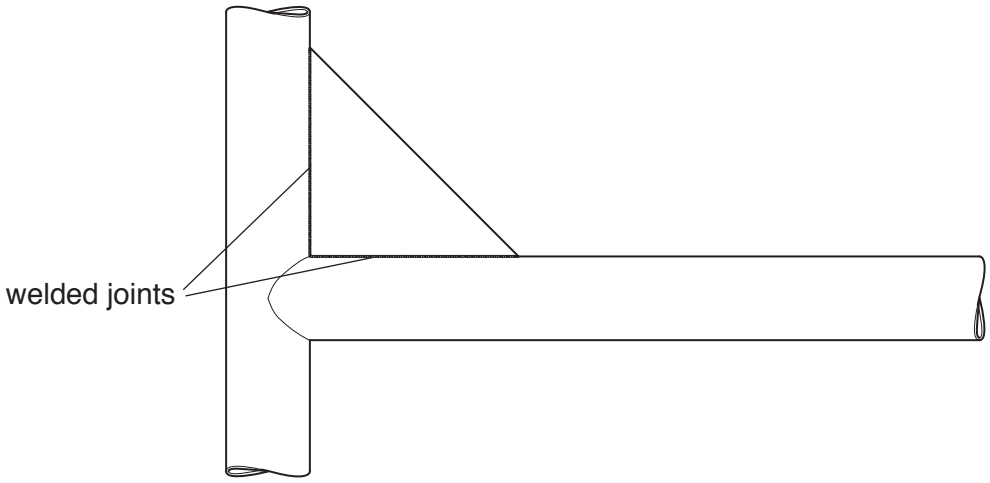

Fig. 4

(a) Name the method of reinforcement.

.....[1]

(b) Use sketches and notes to show a different method of reinforcing the joint.

[2]

8 **(a)** State the force that is applied to a screw as it is inserted into a piece of wood.

.....[1]

(b) Explain why more care has to be taken when inserting brass screws into a piece of wood compared to steel screws.

.....

.....

.....[2]

9 Glass reinforced plastic (GRP) is a material that can be used for vehicle and boat construction. It consists of layers of chopped or woven glass strands in a polyester resin.

(a) Name the class of materials to which GRP belongs.

.....[1]

(b) State **one** advantage of using plastics in a structure rather than natural timber.

.....

.....[1]

Section B

Answer **one** question from this section.

10 **(a)** Draw and name **one** example of the structures named in each of the boxes below.

natural frame	man-made frame
natural shell	man-made shell

[4]

(b) Concrete is used extensively in the construction industry.

(i) Describe how the tensile strength of concrete can be improved when it is used for making a beam.

.....

.....

.....[2]

(ii) Give **one** reason why the compressive strength of concrete does not need improving.

.....

.....[1]

(iii) Name **one** other force that concrete in a structure may have to withstand.

.....[1]

© UCLES 2018

(c) Fig. 5 shows a concrete beam with a 9 kN load acting on it.

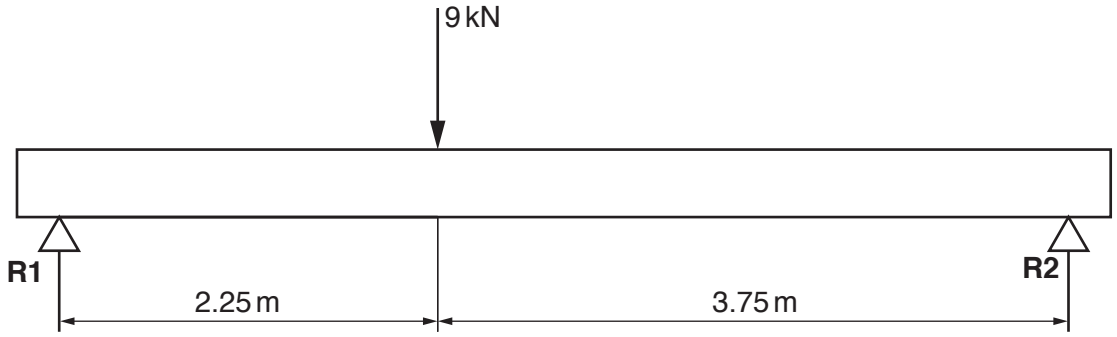

Fig. 5

Calculate the reactions at each end of the beam.

.....

.....

.....

Reaction at **R1** ..... kN Reaction at **R2** ..... kN [4]

(d) Fig. 6 shows an axle stand and ramps, both used to support the weight of a car.

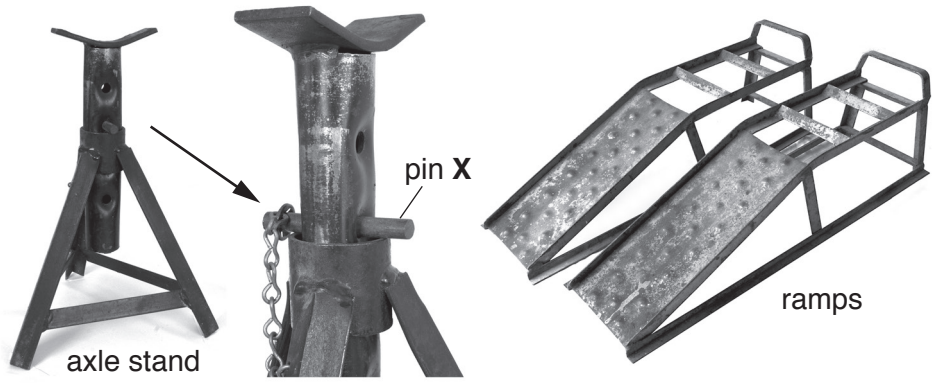

Fig. 6

(i) Circle an area on Fig. 6 where triangulation has been used to increase strength. [1]

(ii) Pin **X** is used to adjust the height of the axle stand.
State the force that will be acting on pin **X** when a car is being supported.

.....[1]

(iii) Give **two** changes to pin **X** that will allow for an increased load.

1 .....

2 .....
[2]

(iv) Explain why steel angle as shown in Fig. 7 has been used to construct the ramps rather than flat section material.

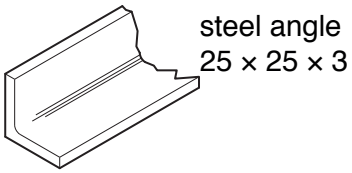

Fig. 7

.....

.....

.....[2]

(v) The car ramps have to withstand both stationary and moving loads.
Add notes to the drawing below to show how the moving load of a car ascending the ramps will affect the structure.

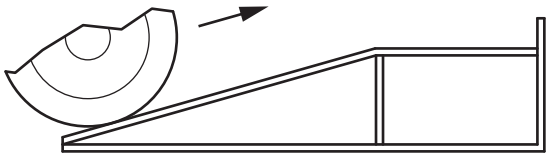

[3]

(vi) Give **two** reasons why welding has been chosen as the joining method on both the axle stand and the ramps.

1 .....

2 .....
[2]

(vii) Explain why the designers and manufacturers of the axle stand and ramps will have considered Factor of Safety in the design.

.....

.....

.....[2]

11 (a) (i) Give **two** reasons for using gears in a mechanism.

1 .....

.....

2 .....

.....
[2]

(ii) Fig. 8 shows a simple gear arrangement.

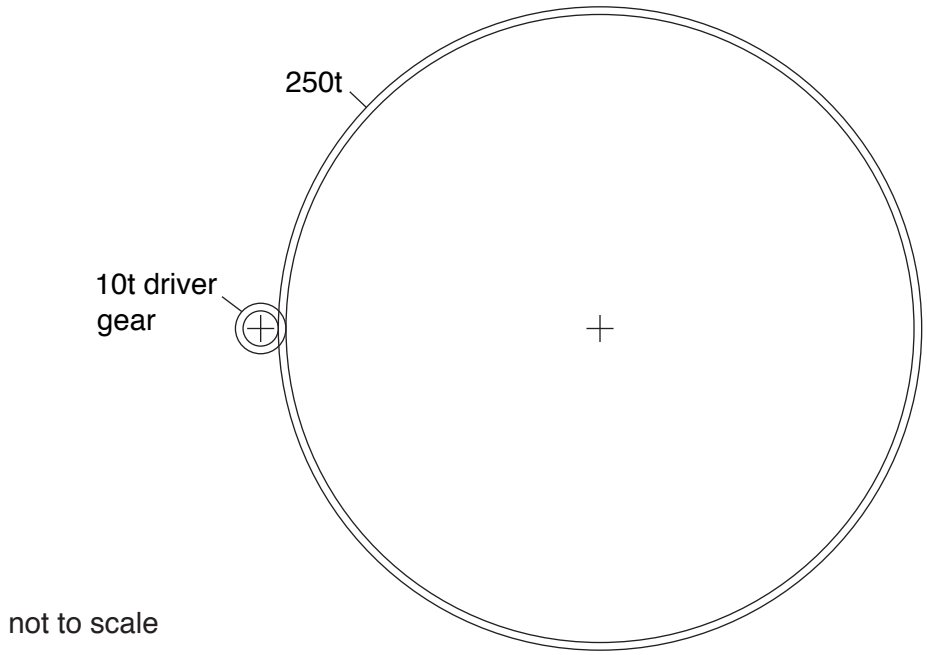

Fig. 8

State the velocity ratio of the gear arrangement.

.....[1]

(iii) If the output shaft rotates at 11.5 rpm calculate the rotational speed of the input shaft.

.....

.....[2]

(iv) Fig. 9 shows a compound gear train that will give the same velocity ratio as the simple gear arrangement in Fig. 8.

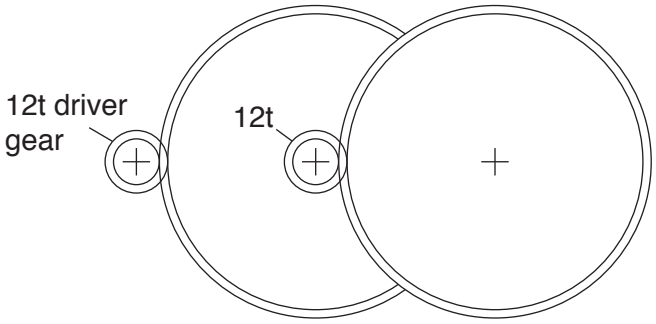

Fig. 9

Calculate the number of teeth on each of the larger gears.
Each of the larger gears has the same number of teeth.

.....

.....

.....[2]

(v) State **one** advantage of using the compound gear arrangement compared to the simple gear arrangement.

.....

.....[1]

(vi) In a gear system the driver and driven gears have to be secured to prevent rotation on the shaft but must be removable for maintenance.
Use sketches and notes to show a method of securing a gear onto a shaft that will allow for easy removal.

[3]

(vii) Give **one** factor that will reduce the energy demands of a gear system.

.....[1]

(b) Fig. 10 shows a model hot air engine. The engine uses two cylinders and two pistons.

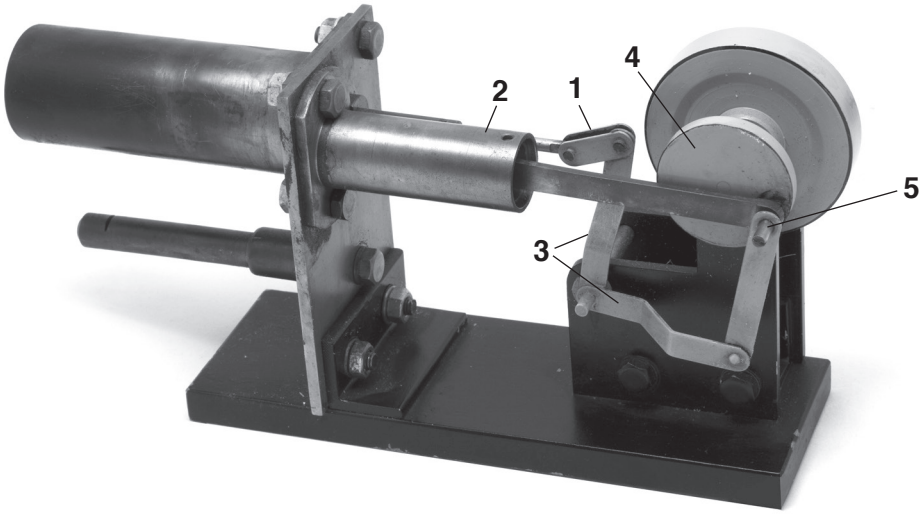

Fig. 10

(i) Complete the table below to identify parts of the hot air engine.
One has been done for you.

Number	Component
3	Bell crank lever
	Linkage
	Crank web
	Crank pin

[3]

(ii) State the purpose of a bell crank lever.

.....[1]

(iii) Lubrication holes are provided as shown in Fig. 11.

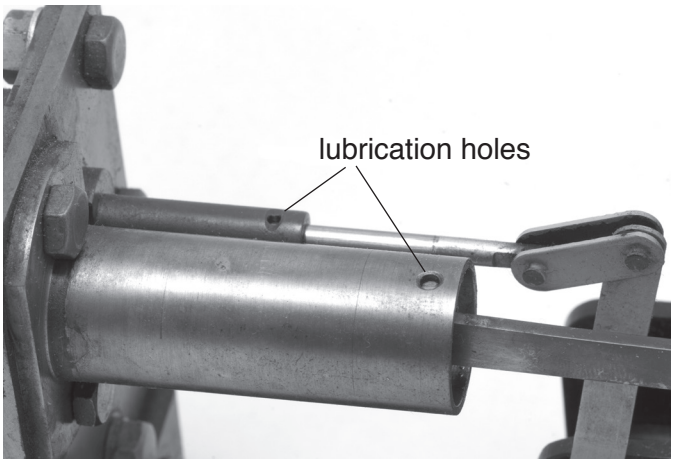

Fig. 11

Explain why lubrication is important in a mechanism.

.....

.....

.....[2]

(iv) Fig. 12 shows the piston attached to the connecting rod, which is the input; movement of the flywheel is the output.

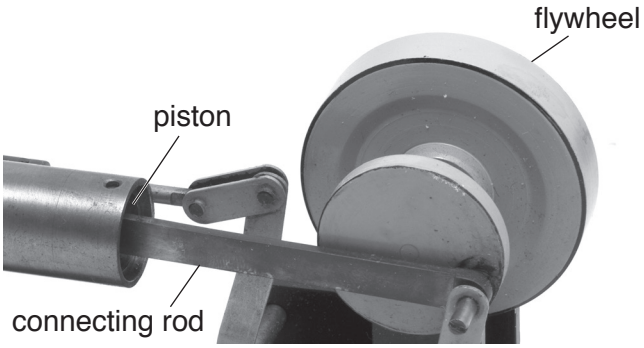

Fig. 12

Give the conversion of motion that is produced when the engine is working.

..... to ..... [2]

(c) Mechanisms can use belts to transfer motion from one shaft to another.
Fig. 13 shows two types of drive belt.

Fig. 13

(i) Give **one** different benefit for each type of belt.

Belt **A** .....

.....

Belt **B** .....

.....
[2]

(ii) Drive belts need a tensioning device when in use.
Use sketches and notes to show **one** method of tensioning a drive belt.

[3]

12 Electronic components can be either polarised or non polarised.

(a) Complete the table below by adding a tick (✓) next to the polarised components.

Component	Polarised
Polyester capacitor	
Diode	
NPN transistor	
Light dependent resistor	
Battery	
Electrolytic capacitor	
PTM switch	
Thermistor	

[4]

(b) A very short signal is often all that is required to trigger an alarm circuit.
When it has been triggered the alarm needs to stay on until reset; this is called a latch or memorised signal.
Fig. 14 shows a circuit that uses a DPDT relay to latch a signal until the reset switch is pressed.

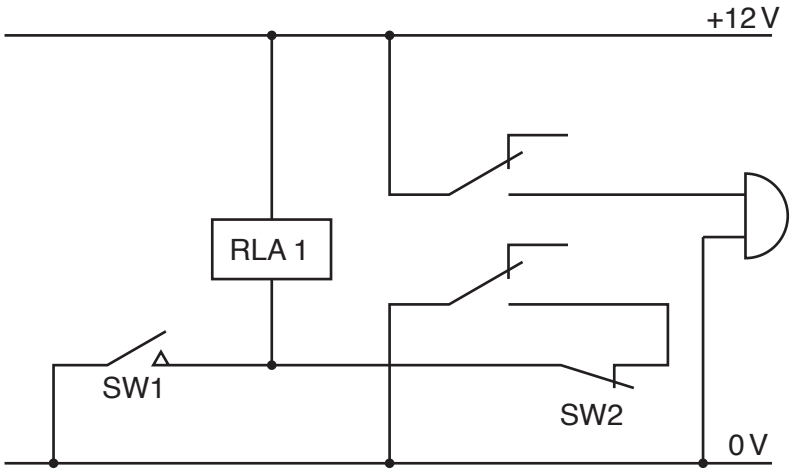

Fig. 14

(i) SW1 is used to set the latch and SW2 is the reset.
State the types of switch used to set and reset the latch.

SW1 .....

SW2 .....

[2]

(ii) The resistance of the relay coil is 48 Ω.
Calculate the current through the relay coil when the relay is activated.
Use the formula V = I × R

.....

.....

.....[3]

(iii) Fig. 15 shows the outline of the relay and the arrangement of the terminals.

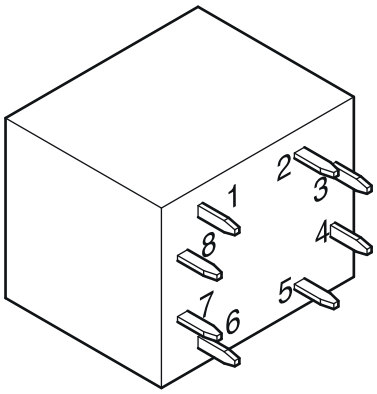

Fig. 15a

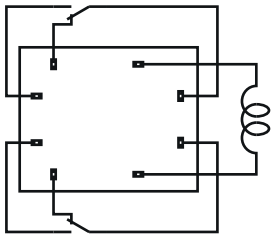

view from below

Fig. 15b

Give the numbers of the coil contact pins on Fig. 15a.

.....[2]

(c) Fig. 16 shows an alternative method of latching a signal using NAND gates.
When SW1 is closed the output **Q** will go high and remain in that state until SW2 is closed, when the output **Q** will go low again.

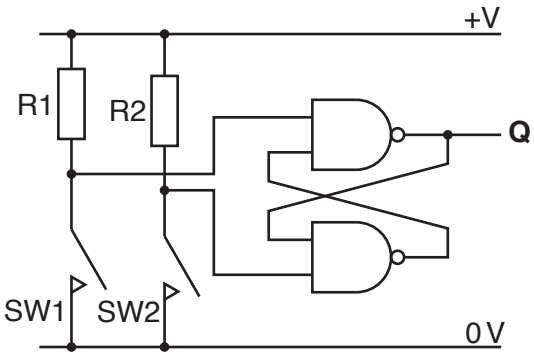

Fig. 16

(i) Give **one** advantage of using logic gates compared to a relay for a latch.

.....

.....[1]

(ii) Give **one** disadvantage of the logic circuit compared to the relay latch.

.....

.....[1]

(iii) Fig. 17 shows a CMOS quad NAND IC.
When used to make the latch circuit in Fig. 16 there will be two spare logic gates which must have the inputs connected to a logic level.

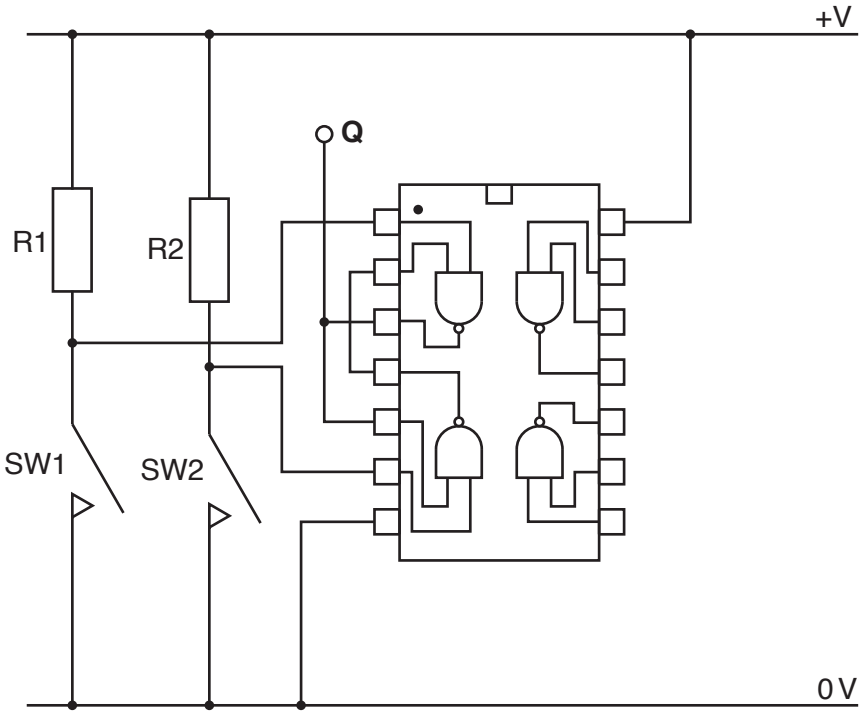

Fig. 17

Add the connections for the spare gates. [2]

(iv) CMOS ICs are sensitive to static electricity.
Describe how damage to the IC can be avoided.

.....

.....

.....[2]

(v) The signal at **Q** will only provide a low current which must be amplified.
Complete the circuit in Fig. 18 to show a transistor amplifier for the signal at **Q**.

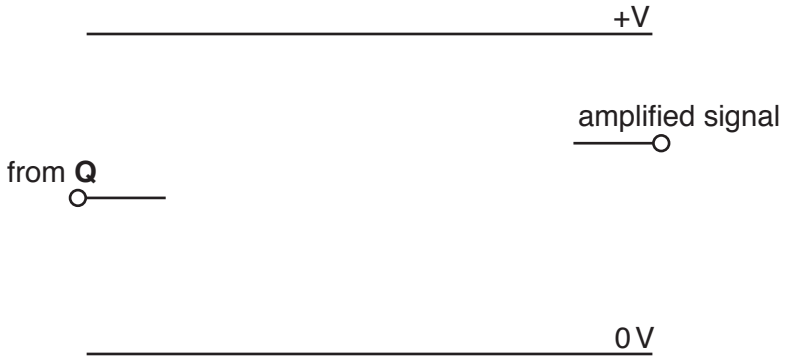

[3]

Fig. 18

(d) Fig. 19 shows the outline of a seven segment display with the pin diagram for the display.

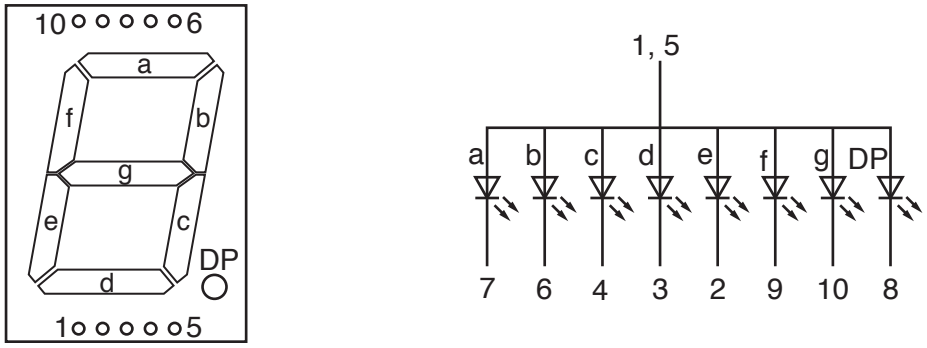

Fig. 19

(i) Describe the use of pins 1 and 5.

.....

.....

.....[2]

(ii) Explain why there are two pins doing the same job.

.....

.....

.....[2]

(iii) State the pin numbers of the segments that must be lit to display the number '3'.

.....[1]

BLANK PAGE

BLANK PAGE

BLANK PAGE

Permission to reproduce items where third-party owned material protected by copyright is included has been sought and cleared where possible. Every reasonable effort has been made by the publisher (UCLES) to trace copyright holders, but if any items requiring clearance have unwittingly been included, the publisher will be pleased to make amends at the earliest possible opportunity.

To avoid the issue of disclosure of answer-related information to candidates, all copyright acknowledgements are reproduced online in the Cambridge International Examinations Copyright Acknowledgements Booklet. This is produced for each series of examinations and is freely available to download at www.cie.org.uk after the live examination series.

Cambridge International Examinations is part of the Cambridge Assessment Group. Cambridge Assessment is the brand name of University of Cambridge Local Examinations Syndicate (UCLES), which is itself a department of the University of Cambridge.

© UCLES 2018